DocuSign Envelope ID: CB9B4E4E-205A-45F9-BDB4-6F6CE8A5433F

PROJECT REFERENCE NO.	SHEET NO.
17BP.14.R.115	2C-2

DOCUMENT NOT CONSIDERED FINAL UNLESS ALL SIGNATURES COMPLETED

STATE OF NORTH CAROLINA
DEPT. OF TRANSPORTATION
DIVISION OF HIGHWAYS
RALEIGH, N.C.

ROADWAY DETAIL DRAWING FOR
GUARDRAIL INSTALLATION

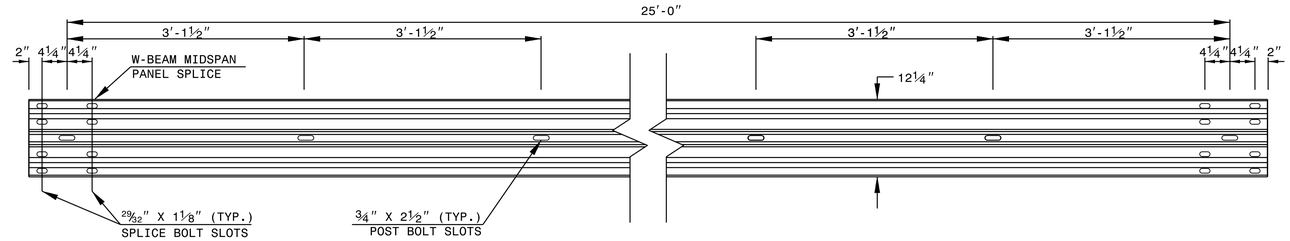

STANDARD W-BEAM GUARDRAIL

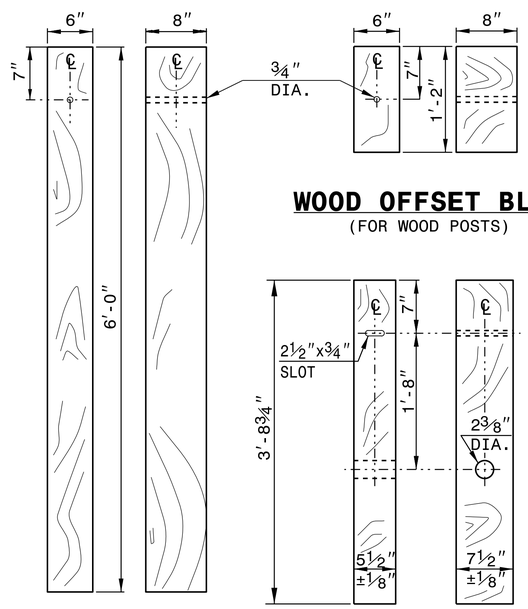

STANDARD LINE POST

WOOD OFFSET BLOCK
(FOR WOOD POSTS)

SHORT WOOD BREAKAWAY POST

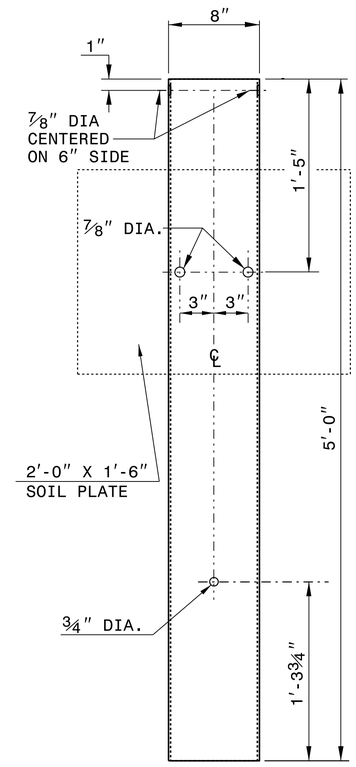

STEEL TUBE
TS 6"x8"x0.1875"

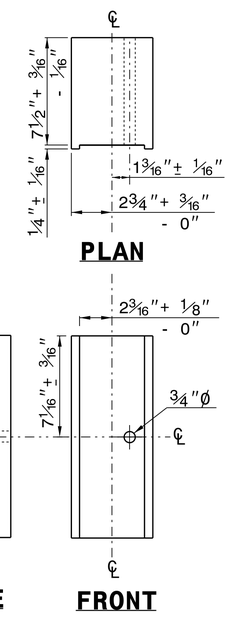

SIDE FRONT

ROUTED OFFSET BLOCK

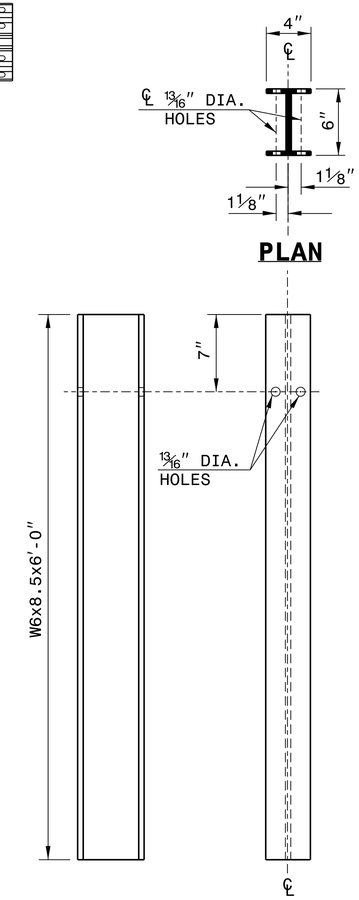

SIDE FRONT

"W6" STEEL POST

SYSTEM PARTS

SHEET 6 OF 8
862D02

STATE OF NORTH CAROLINA
DEPT. OF TRANSPORTATION
DIVISION OF HIGHWAYS
RALEIGH, N.C.

ROADWAY DETAIL DRAWING FOR
GUARDRAIL INSTALLATION

SHEET 6 OF 8
862D02

3/14/2021
NORTH CAROLINA PROFESSIONAL SEAL 022966 ENGINEER JOHN S. HOWERTON
DocuSigned by: 973F3D17DC0C45F...

CONTRACTS STANDARDS AND DEVELOPMENT UNIT
Office 919-707-6950 FAX 919-250-4119

SEE TITLE BLOCK

ORIGINAL BY: J.HOWERTON DATE: 3-7-2018
MODIFIED BY: DATE:
CHECKED BY: DATE:
FILE SPEC.: