DocuSign Envelope ID: 40892853-551A-4421-AE8E-0171340C8F0D

8/17/99

PROJECT REFERENCE NO.	SHEET NO.
17BP.14.R.115	UC-3

DESIGNED BY: RGW
DRAWN BY:
CHECKED BY:
APPROVED BY: RGW
REVISED:

NORTH CAROLINA DEPARTMENT OF TRANSPORTATION

UTILITIES ENGINEERING SEC.
PHONE:(919)707-6690
FAX:(919)250-4151

3/15/2021
NORTH CAROLINA PROFESSIONAL SEAL 14601 ENGINEER ROGER G. WORTHINGTON, JR.
DocuSigned by: 2000CC2249D4EF...

UTILITY CONSTRUCTION PLANS ONLY

DOCUMENT NOT CONSIDERED FINAL UNLESS ALL SIGNATURES COMPLETED

UTILITY CONSTRUCTION

NOTES
1. CONCRETE THRUST BLOCKS SHALL BEAR AGAINST UNDISTURBED EARTH. IN AREAS WHERE BEARING SOILS HAVE BEEN DISTURBED, RESTRAINED JOINTS SHALL BE USED.
2. ALL FORCE MAIN BENDS, TEES, MAIN TAPS, AND END CAPS SHALL REQUIRE A CONCRETE THRUST BLOCK.
3. WHERE UNDISTURBED EARTH BACKING IS NOT AVAILABLE THRUST RESTRAINT RODS SHALL BE USED WITH BLOCK.
4. CONCRETE TO HAVE MINIMUM COMPRESSIVE STRENGTH OF 4000 PSI AT 28 DAYS.
5. CONCRETE SHALL NOT BE ALLOWED TO RUN.

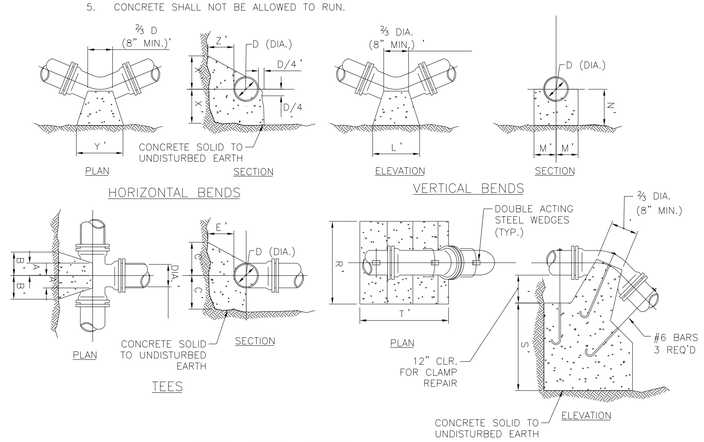

DETECTABLE IDENTIFICATION TAPE TABLE

	TAPE COLOR	INSCRIPTION
SANITARY SEWER	GREEN	'CAUTION SEWER LINE BURIED BELOW'
POTABLE WATER	BLUE	'CAUTION WATER LINE BURIED BELOW'

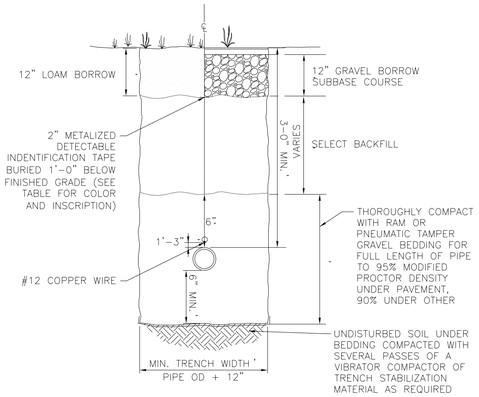

FM PIPE TRENCH DETAIL
NOT TO SCALE

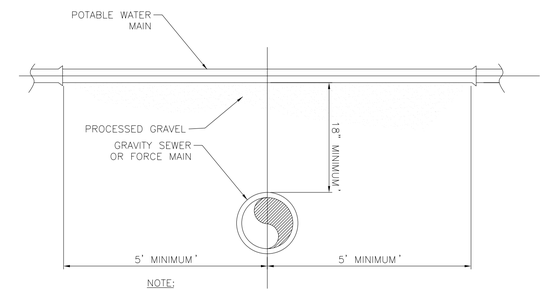

NOTE:
WATER MAIN AND SEWER MINIMUM SEPARATION:
18" VERTICAL SEPARATION, 10'-0" HORIZONTAL SEPARATION

TYPICAL UTILITY PIPE CROSSING
NOT TO SCALE

TEES

	PIPE SIZE-D (DIA.)						
	2"	4"	6"	8"	12"	16"	20"
A	2"	4"	8"	10"	1'-0"	1'-3"	1'-6"
B	4"	6"	8"	10"	1'-2"	1'-4"	1'-6"
C	6"	8"	10"	1'-0"	1'-3"	1'-6"	1'-8"
E	4"	6"	8"	10"	1'-2"	1'-6"	1'-10"

ANCHORAGES PIPE

BEND		PIPE SIZE-D (DIA.) 2"	4"	6"	8"	12"	16"	20"
1/8	R	1'-8"	2'-2"	2'-6"	3'-0"	4'-6"	5'-4"	6'-0"
	S	2'-6"	2'-3"	2'-6"	2'-9"	3'-6"	2'-6"	5'-6"
	T	1'-0"	2'-0"	3'-0"	4'-0"	4'-9"	7'-0"	9'-6"
1/16	R	1'-4"	1'-4"	2'-0"	2'-8"	4'-0"	4'-6"	5'-0"
	S	1'-3"	1'-3"	1'-9"	2'-3"	2'-6"	3'-2"	3'-8"
	T	1'-0"	1'-8"	2'-6"	3'-4"	4'-0"	6'-0"	8'-6"
1/32	R	1'-0"	1'-2"	1'-6"	2'-0"	3'-0"	3'-8"	4'-3"
	S	1'-0"	1'-0"	1'-3"	1'-9"	2'-0"	2'-4"	2'-6"
	T	1'-0"	1'-6"	2'-0"	2'-6"	3'-0"	4'-6"	5'-9"

HORTIZONTAL BENDS

BEND		PIPE SIZE-D (DIA.) 2"	4"	6"	8"	12"	16"	20"
1/4	X	4.5"	9"	1'-0"	1'-4"	1'-11"	2'-8"	3'-4"
	Y	9"	18"	2'-0"	2'-8"	3'-10"	5'-6"	6'-8"
	Z	8"	8"	1'-0"	1'-4"	2'-1"	2'-1"	2'-1"
1/8	X	8"	8"	1'-0"	1'-0"	1'-0"	1'-3"	1'-6"
	Y	8"	10"	1'-0"	1'-6"	2'-0"	2'-6"	3'-0"
	Z	4"	6"	8"	10"	1'-2"	1'-4"	1'-6"
1/16	X	8"	8"	1'-0"	1'-0"	1'-0"	1'-3"	1'-6"
	Y	8"	10"	1'-0"	1'-4"	1'-6"	1'-9"	2'-6"
	Z	4"	6"	8"	10"	1'-2"	1'-4"	1'-6"
1/32	X	8"	8"	1'-0"	1'-0"	1'-0"	1'-2"	1'-4"
	Y	8"	10"	1'-0"	1'-0"	1'-2"	1'-4"	1'-6"
	Z	4"	6"	8"	10"	1'-2"	1'-4"	1'-6"

VERTICAL BENDS

BEND		PIPE SIZE-D (DIA.) 2"	4"	6"	8"	12"	16"	20"
1/4	X	2'-9"	2'-9"	2'-9"	3'-0"	3'-4"	4'-7"	6'-1"
	Y	7"	7"	7"	1'-2"	1'-10"	2'-8"	3'-0"
	Z	1'-0"	1'-0"	1'-0"	1'-2"	1'-5"	2'-4"	2'-6"
1/8	L	8"	1'-0"	1'-3"	1'-8"	2'-6"	3'-6"	4'-8"
	M	4"	6"	7"	8"	11"	1'-4"	1'-6"
	N	7"	7"	7"	8"	11"	1'-4"	1'-6"
1/16	L	8"	8"	9"	1'-0"	1'-9"	2'-6"	3'-0"
	M	4"	6"	7"	7"	10"	1'-0"	1'-2"
	N	7"	7"	7"	7"	8"	10"	1'-0"
1/32	L	8"	8"	8"	8"	1'-0"	1'-4"	1'-9"
	M	4"	6"	7"	7"	10"	1'-0"	1'-2"
	N	7"	7"	7"	7"	8"	10"	1'-0"

WSP USA
434 FAYETTEVILLE STREET
SUITE 1100
RALEIGH, NC 27601
TEL: 1.919.836.4049
FAX: 1.919.836.4099
LICENSE NO. F-0165

3/9/2021 7:28:26 AM
$FILEL$
$PENTBL$