DocuSign Envelope ID: C9713339-C6B1-45FD-8C00-B6E2D8E3B77D

WSP USA
434 FAYETTEVILLE STREET
SUITE 1300
RALEIGH, NC 27601
PH: (919) 836-4040
FAX: (919) 836-4099
LICENSE NO. F-0165

PROJECT REFERENCE NO.	SHEET NO.
17BP.14.R.115	PMP-1

APPROVED: _____

DATE: _____

SEAL 3/17/2021

NORTH CAROLINA PROFESSIONAL SEAL 043754 ENGINEER ERIC W. BOWMAN

DocuSigned by:
Eric W. Bowman
DAD4209C6902465...

DOCUMENT NOT CONSIDERED FINAL UNLESS ALL SIGNATURES COMPLETED

STATE OF NORTH CAROLINA
DEPARTMENT OF TRANSPORTATION

PAVEMENT MARKING PLANS
MACON COUNTY

LOCATION: BRIDGE NO. 029 ON SR 1475 (WHITE OAK LANE) OVER WHITE OAK CREEK

ROADWAY STANDARD DRAWINGS

THE FOLLOWING ROADWAY STANDARDS AS APPEAR IN "ROADWAY STANDARD DRAWINGS"-ROADWAY DESIGN UNIT-N.C. DEPARTMENT OF TRANSPORTATION-RALEIGH, N.C., DATED JANUARY 2012 ARE APPLICABLE TO THIS PROJECT AND BY REFERENCE HEREBY ARE CONSIDERED A PART OF THESE PLANS:

STD. NO.	TITLE
1205.01	PAVEMENT MARKINGS - LINE TYPES AND OFFSETS
1205.02	PAVEMENT MARKINGS - TWO-LANE AND MULTI-LANE ROADWAYS
1205.04	PAVEMENT MARKINGS - INTERSECTIONS (SHEET 1 OF 2)

REVISED ROADWAY STANDARD DRAWINGS

THE FOLLOWING REVISED ROADWAY STANDARDS ARE USED ON THIS PROJECT :

STD. NO.	TITLE
1205D04	PAVEMENT MARKINGS - INTERSECTIONS (SHEET 2 OF 2)
1205D12	PAVEMENT MARKINGS - BRIDGES

INDEX

SHEET NO.	DESCRIPTION
PMP-1	GENERAL NOTES & ROADWAY STANDARD DRAWINGS PAVEMENT MARKING SCHEDULE & PAVEMENT MARKING PLANS

PAVEMENT MARKING SCHEDULE

PAVEMENT MARKING LINES

PA - PAINT - WHITE EDGELINE (4")
PI - PAINT - YELLOW DOUBLE CENTER (4")
P2 - PAINT - WHITE STOPBAR (24")
P8 - PAINT - 2FT.-6FT./SP WHITE MINISKIP (4")

GENERAL NOTES

THE FOLLOWING NOTES APPLY AT ALL TIMES FOR THE DURATION OF THE CONSTRUCTION PROJECT, EXCEPT WHEN NOTED IN THE PLAN, OR DIRECTED BY THE ENGINEER.

A) INSTALL PAVEMENT MARKINGS AND PAVEMENT MARKERS ON THE FINAL SURFACE AS FOLLOWS:

ROAD NAME	MARKING	MARKER
-L-	PAINT	NONE

B) PLACE TWO APPLICATIONS OF PAINT PAVEMENT MARKINGS ON THE FINAL WEARING SURFACE, PLACE THE SECOND APPLICATION OF PAINT UPON SUFFICIENT DRYING TIME OF THE FIRST.

C) TIE PROPOSED PAVEMENT MARKING LINES TO EXISTING PAVEMENT MARKING LINES.

D) REMOVE/REPLACE ANY CONFLICTING/DAMAGED PAVEMENT MARKINGS AND MARKERS.

PAVEMENT MARKING DETAIL

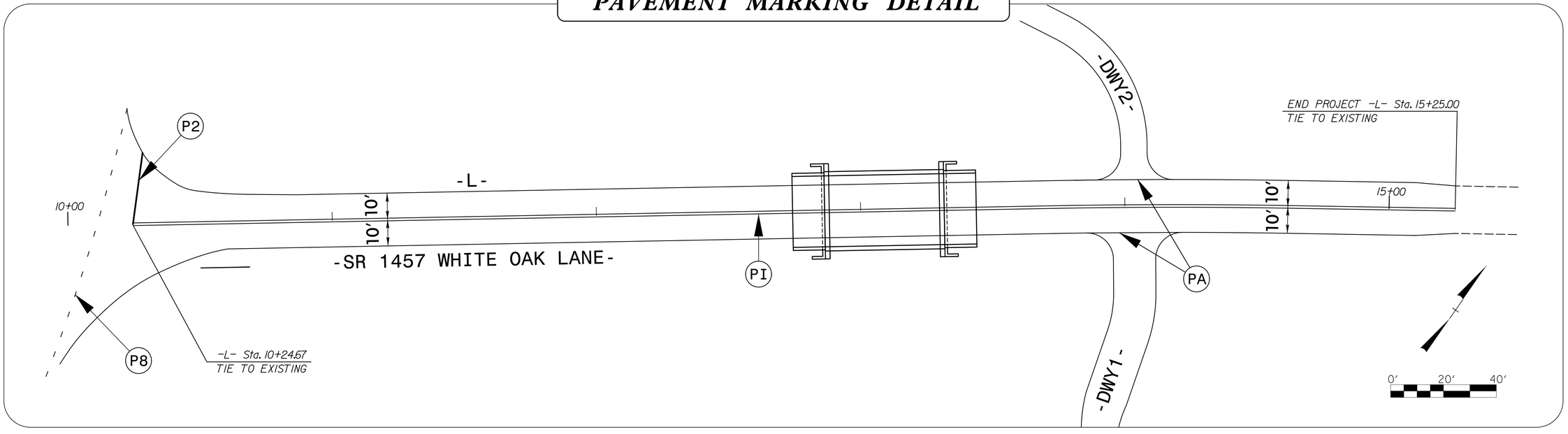

$TIME$
$DATE$
$FILEL$
$PENTBL$